

Linoone

by Brandon

Build by Toshi

PaperPokés

www.pokemonpapercraft.net

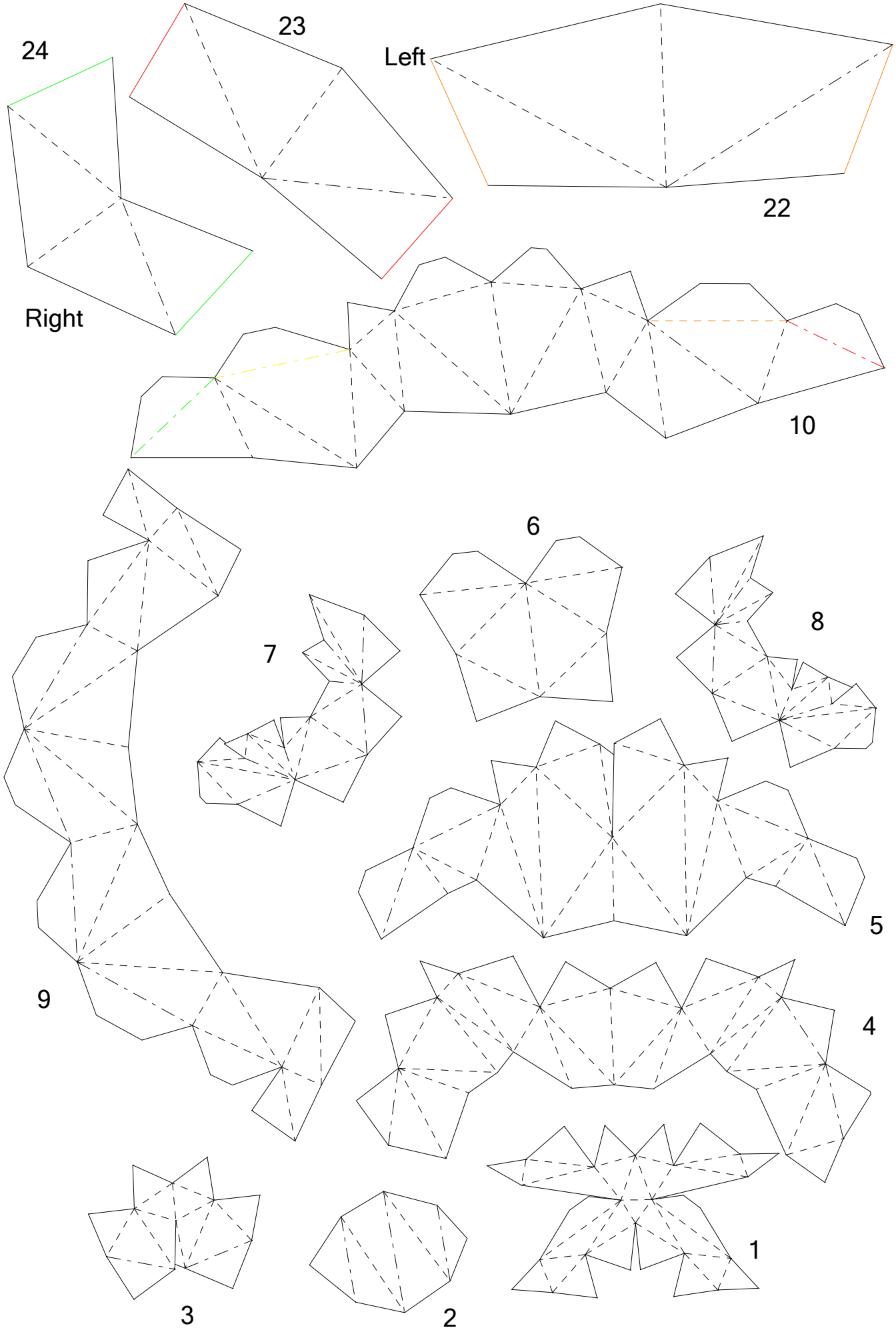
24
23
Left
22
Right
10
6
7
8
5
9
4
3
2
1

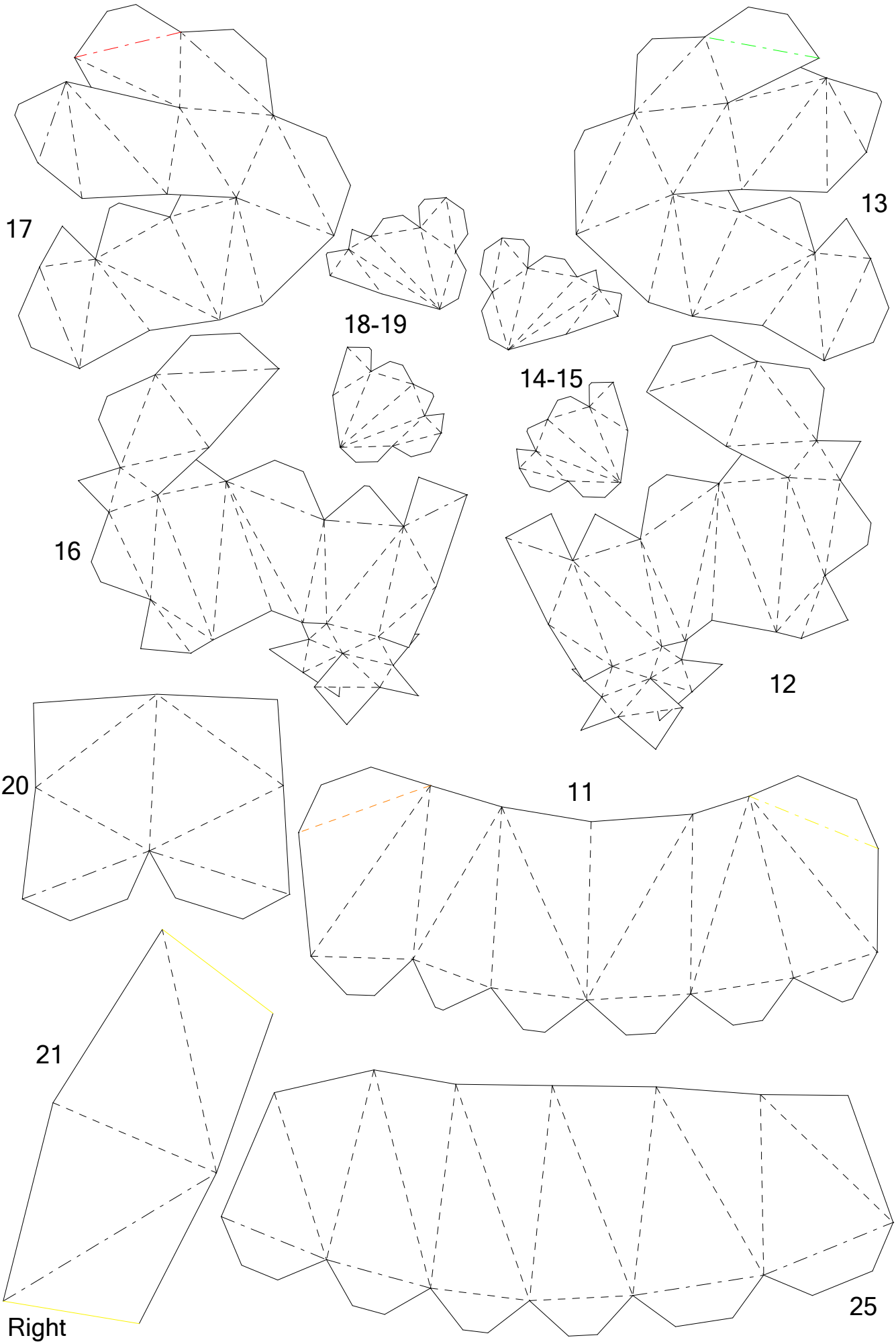
17
18-19
13
14-15
16
12
20
11
21
25
Right

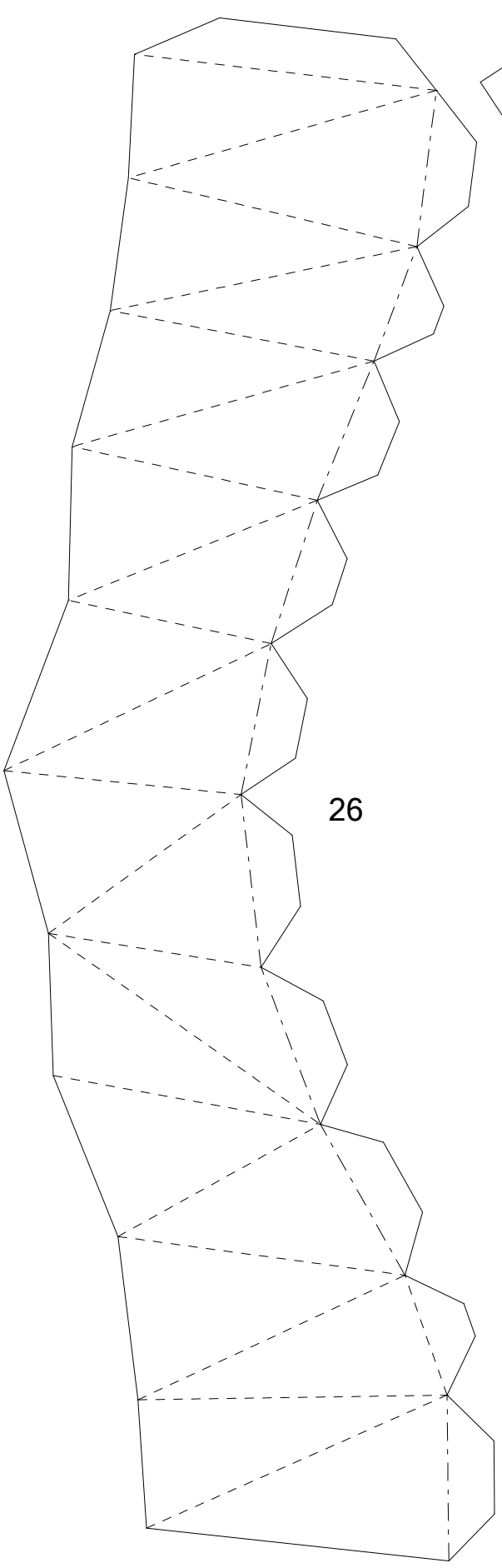
26

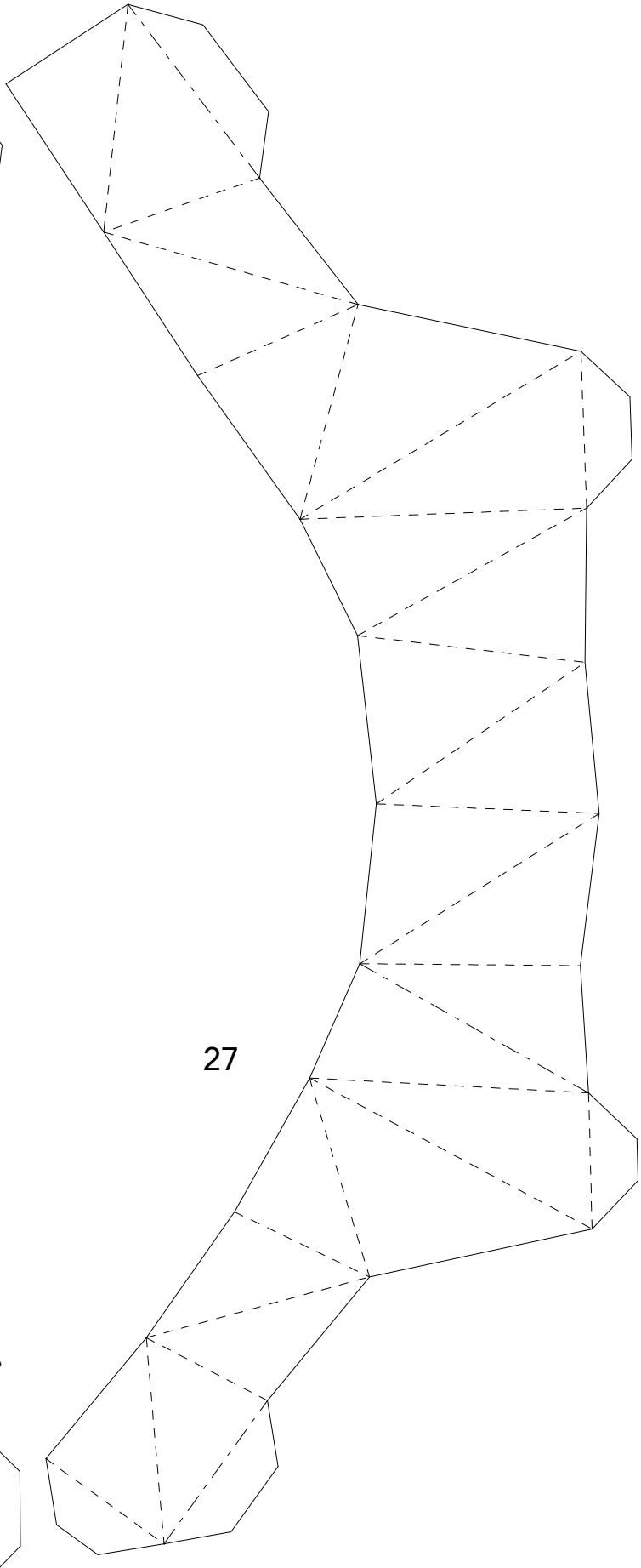
27

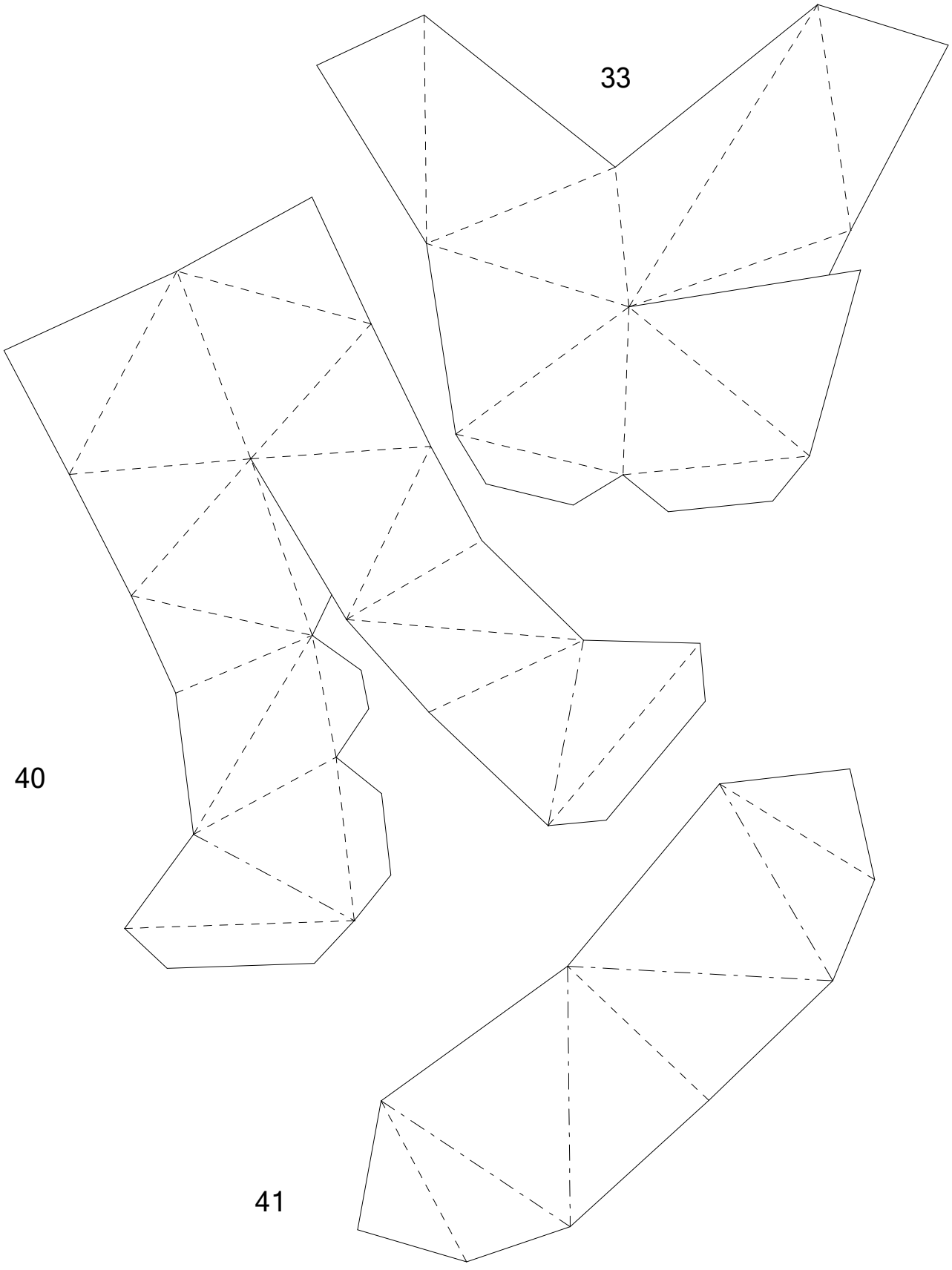
33
40
41

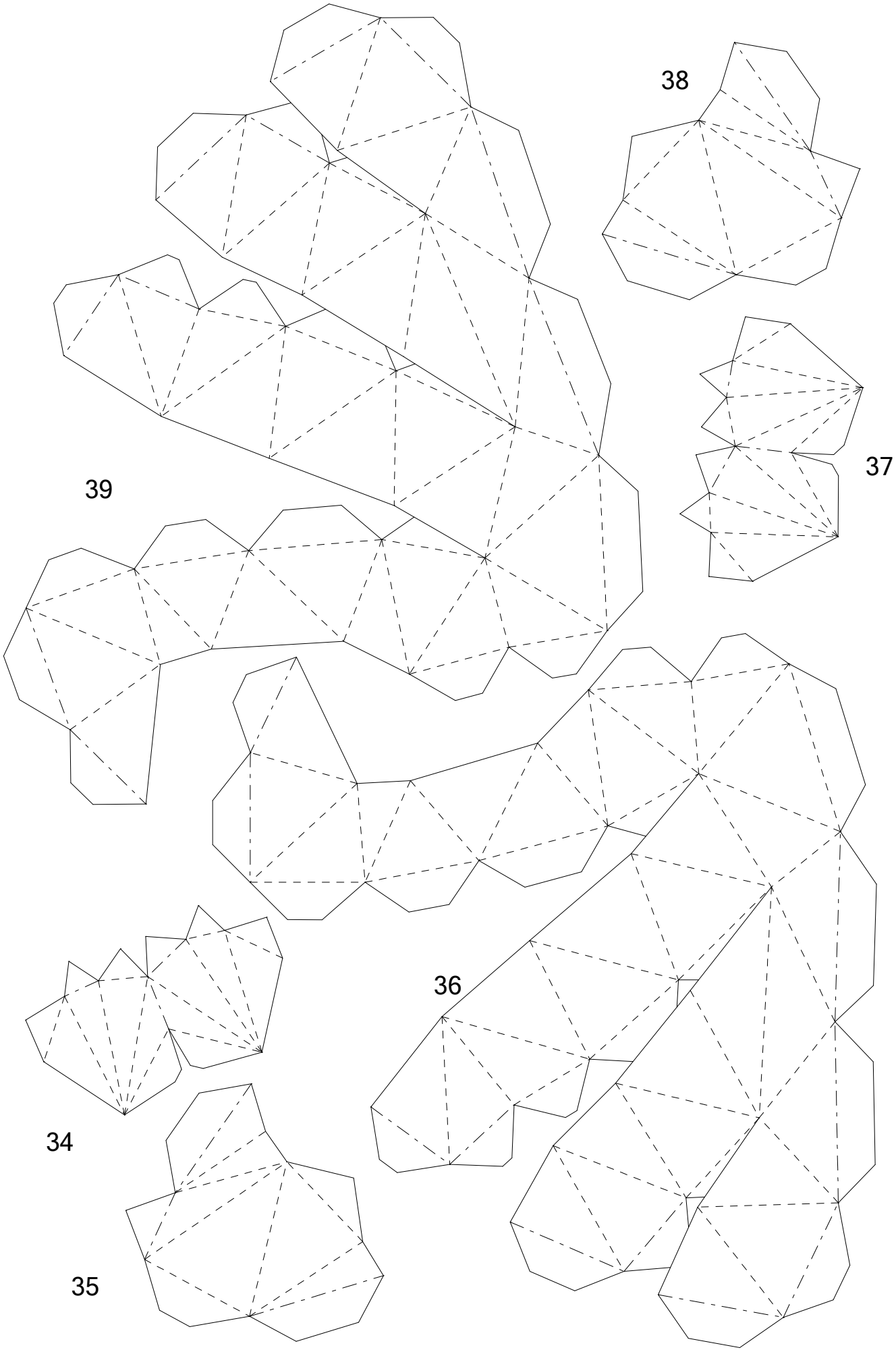
38
37
39
36
34
35

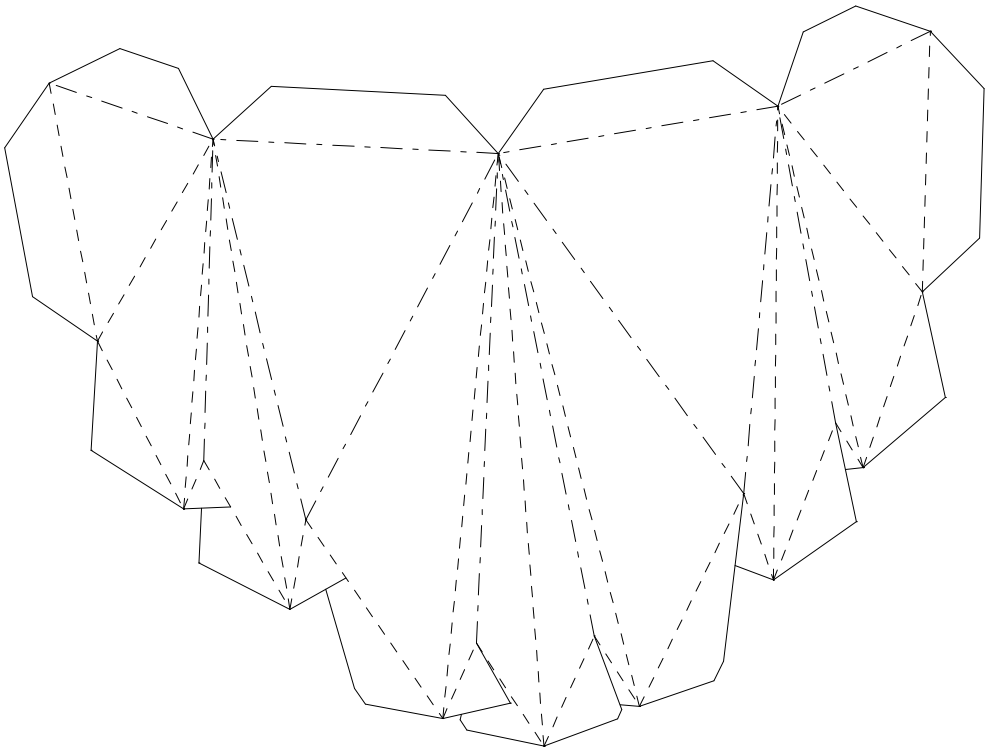

28-29

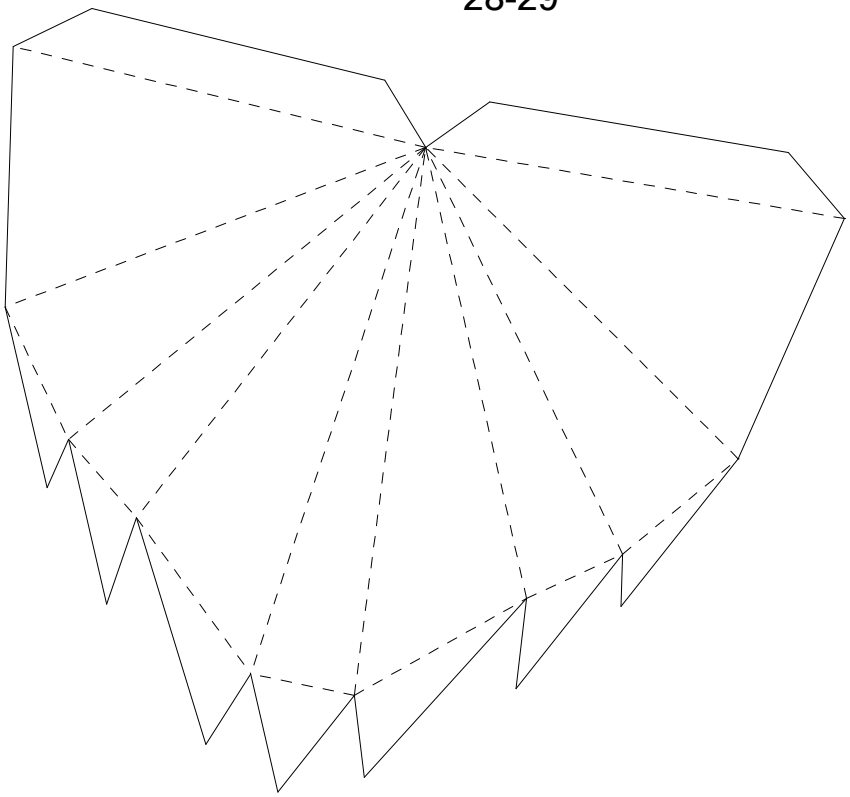

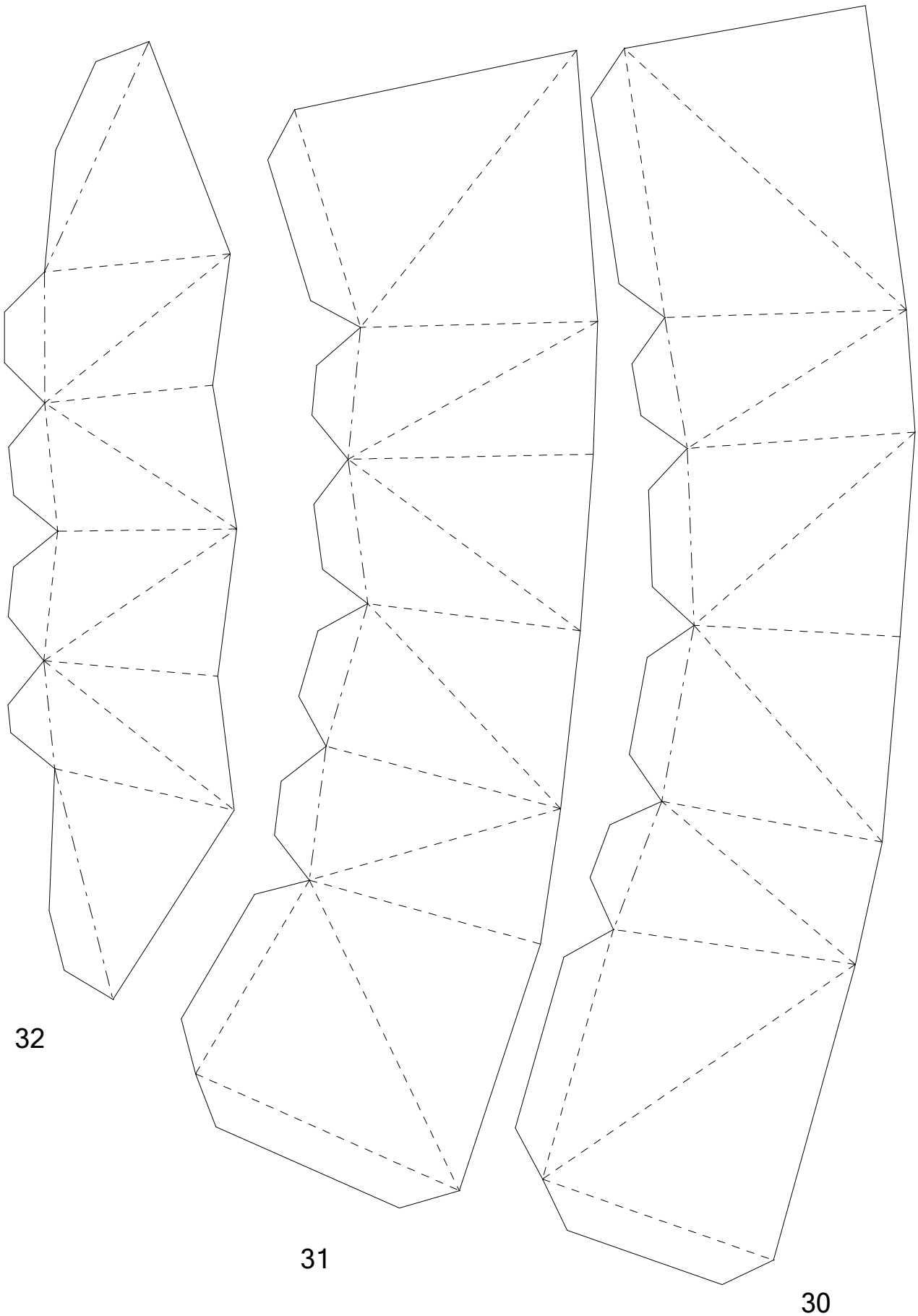
32
31
30